4/2/2019

Find η_c'

$\gamma_c = 1.36$

$M_0 = 10$

$p_0 = 479\ N/m^2$

$T_0 = 222K$

$R_c = 287\ m^2/s^2/K$.

$A_0 = 0.0929\ m^2\ (1\ ft^2)$

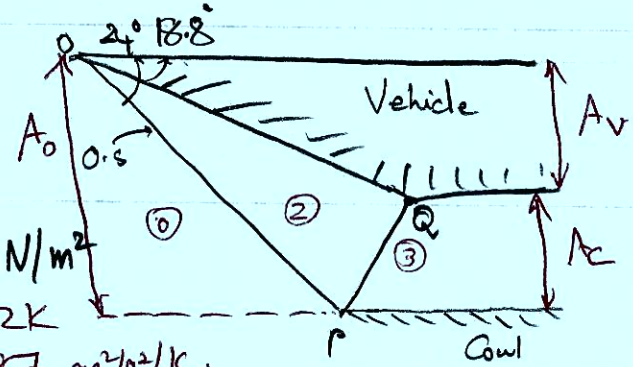

For $M_0 = 10$,

$\gamma_c = 1.36$

$\frac{p_2}{p_{01}} = 18.9$

$\beta_{0-2} = 24°$

M_2 after shock OP $= 4.67$

Bet 2 → 3 Flow turns back parallel.

$\Rightarrow \theta = 18.8°$

$\Rightarrow \beta_{2-3} = 28.8°$

$OP = \frac{A_0}{\sin 24°}$

$A_c = PQ \times \sin(\beta_{2-3} - \theta)$

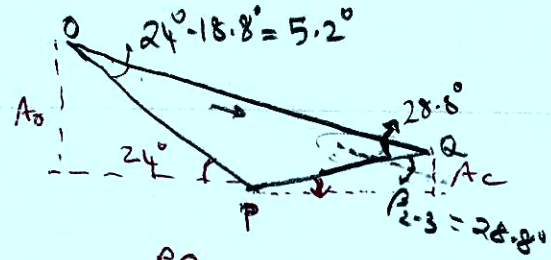

Law of sines in $\Delta OPQ \Rightarrow \frac{OP}{\sin 28.8} = \frac{PQ}{\sin 5.2}$

© North Carolina State University, All Rights Reserved

$$c = \frac{\gamma_c - 1}{\gamma_c}\left(C_{p_c} T_0 + \frac{V_0^2}{2} + \cancel{\frac{Q}{\dot{m}}}^{\,0}\right)$$

$$C_{p_c} = \frac{\gamma_c}{\gamma_c - 1} R_c = 1084 \text{ J/K}.$$

$$c = 1207719$$

$$V = \frac{-b + \sqrt{b^2 - 4ac}}{2a} = \frac{2580 + \sqrt{2580^2 - 4 \times 0.867 \times 1207719}}{2 \times 0.867}$$

$$\boxed{V_3 = 2400 \text{ m/s}}$$

$$T_3 = \frac{\gamma_c - 1}{\gamma_c R_c^2} c - \frac{V_3^2}{2C_{p_c}}$$

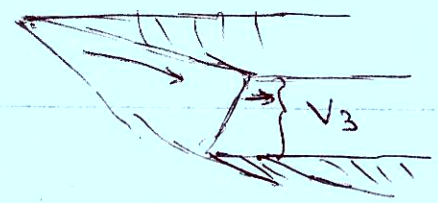

$$= \frac{1}{C_{p_c}}\left(C_{p_c} T_0 + \frac{V_0^2}{2} + \cancel{\frac{Q}{\dot{m}}}^{\,0}\right) - \frac{V_3^2}{2C_{p_c}}$$

$$= \frac{1}{1084}\left(1084 \times 222 + \frac{2940^2}{2}\right) - \frac{2400^2}{2 \times 1084}$$

$$= 1550 \text{ K}.$$

$$\psi = \frac{T_3}{T_0} = \frac{1550}{222} = 6.75.$$

© North Carolina State University, All Rights Reserved

$$PQ = \frac{OP}{\sin 28.8^\circ} \sin 5.2^\circ$$

$$PQ = \frac{A_0}{\sin 24^\circ} \times \frac{\sin 5.2^\circ}{\sin 28.8^\circ}$$

$$A_c = PQ \sin 10^\circ = \frac{A_0 \sin 5.2^\circ \sin 10^\circ}{\sin 24^\circ \sin 28.8^\circ} = 0.08 A_0$$

$$A_v = 0.92 A_0 = \cancel{0.92 \times 0.0929 \, m^2} \; 0.92 \times 0.0929$$

$$F_{bx} = -p_2 \times A_v = -\left(\frac{p_2}{p_1}\right) \times p_1 \times A_v$$

$$= -18.9 \times 479 \times 0.92 \times \cancel{0.0929} \; 0.0929 \; N$$

$$= -773 \; N.$$

Find V_3

$$a = \frac{\gamma_c + 1}{2\gamma_c} = 0.867$$

$$b = -\left(V_0 + \frac{p_0 A_0 + F_{bx}}{\dot{m}_0}\right) = -\left(M_0 \sqrt{\gamma R T_0} + \frac{p_0 A_0 + F_{bx}}{\dot{m}_0}\right)$$

$$V_0 = M_0 \sqrt{\gamma R T_0} = 2940 \; m/s$$

$$\dot{m}_0 = \frac{p_0 V_0 A_0}{R_c T_0} = 2.05 \; kg/s$$

$$b = -\left(2940 + \frac{479 \times 0.0929 - 773}{2.05}\right)$$

$$= -2580$$

© North Carolina State University, All Rights Reserved

$$p_3 = \frac{\dot{m}_o R_c T_3}{\underbrace{A_3}_{A_c = 0.08 A_o} V_3} = \frac{2.05 \times 287 \times 1550}{0.08 \times 0.0929 \times 2400} = 51000 \ N/m^2$$

$$\eta_c' = \frac{1 - \left(p_o/p_3\right)^{\frac{\gamma_c - 1}{\gamma_c}}}{1 - \left(\frac{1}{\tau}\right)} = \frac{1 - \left(\frac{479}{51000}\right)^{\frac{0.36}{1.36}}}{1 - \frac{1}{6.75}} = \underline{\underline{0.838}}$$

© North Carolina State University, All Rights Reserved

Inlet isolators.

- Why do you need an isolator?
- The pressure delivered to the combustor can be anywhere between p_0 & pr rise across a normal shock.
- The pressure rise delivered by the inlet/isolator system would be dictated by p_3 induced by combustion & other pressure rise from fuel injection blockage or choking of a downstream area, etc.
- Hence, typically, the required pressure rise is less than the max value with N.S. but greater than p_0 & this value keeps changing during flight
- Isolator helps with delivering the back pressure @ any value between inlet pr. & max pr as long as the isolator duct is long enough.

$$\frac{L}{H} = \frac{\sqrt{\frac{\theta}{H}}}{(Re_\theta)^{1/4}} \left\{ \frac{50\left(\frac{p_e}{p_i}-1\right) + 170\left(\frac{p_e}{p_i}-1\right)^2}{M_i^2 - 1} \right\}$$

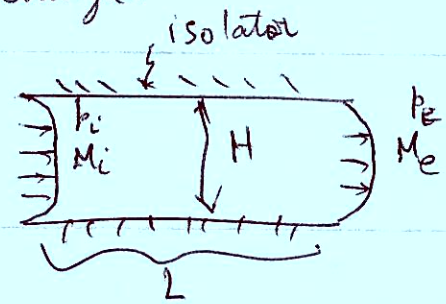

θ : approach b.l. momentum thickness

p_e : isolator exit pr.

p_i : isolator inlet (start of isolator) pressure.

M_i : isolator entry plane Mach #.

H : height of isolator channel.

© North Carolina State University, All Rights Reserved

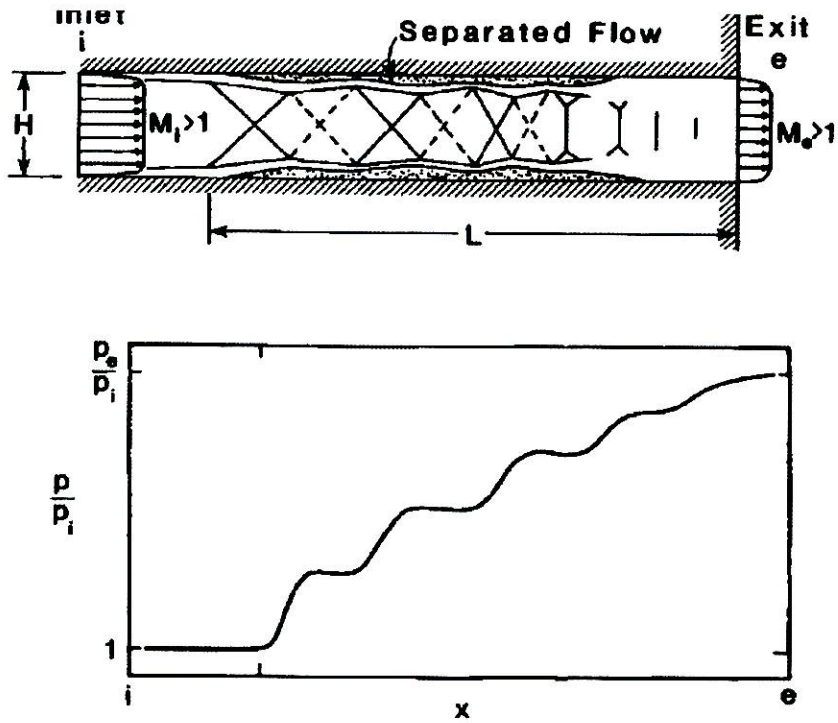

Fig. 5.25 Schematic drawing of the flow pattern and static wall

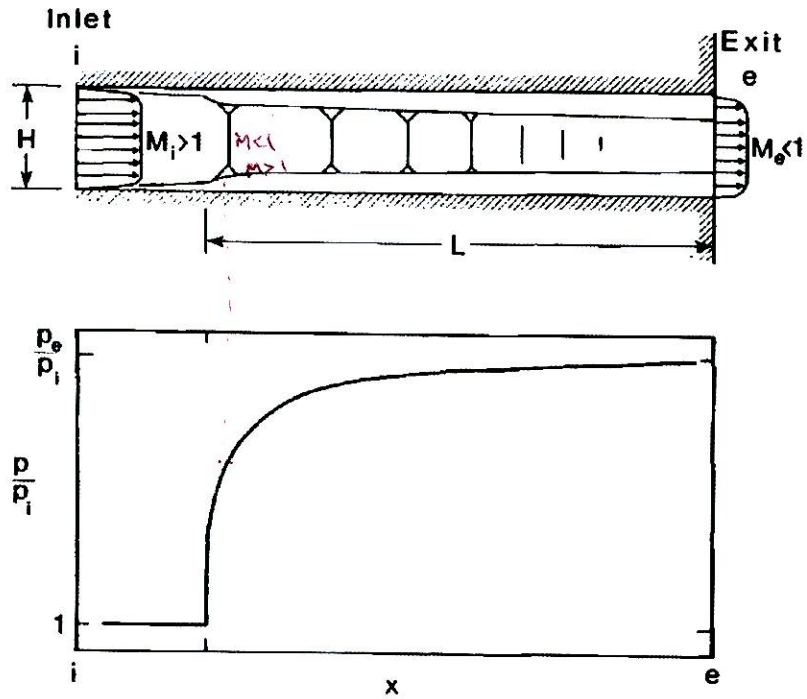

Fig. 5.34 Schematic drawing of the flow pattern and static wall